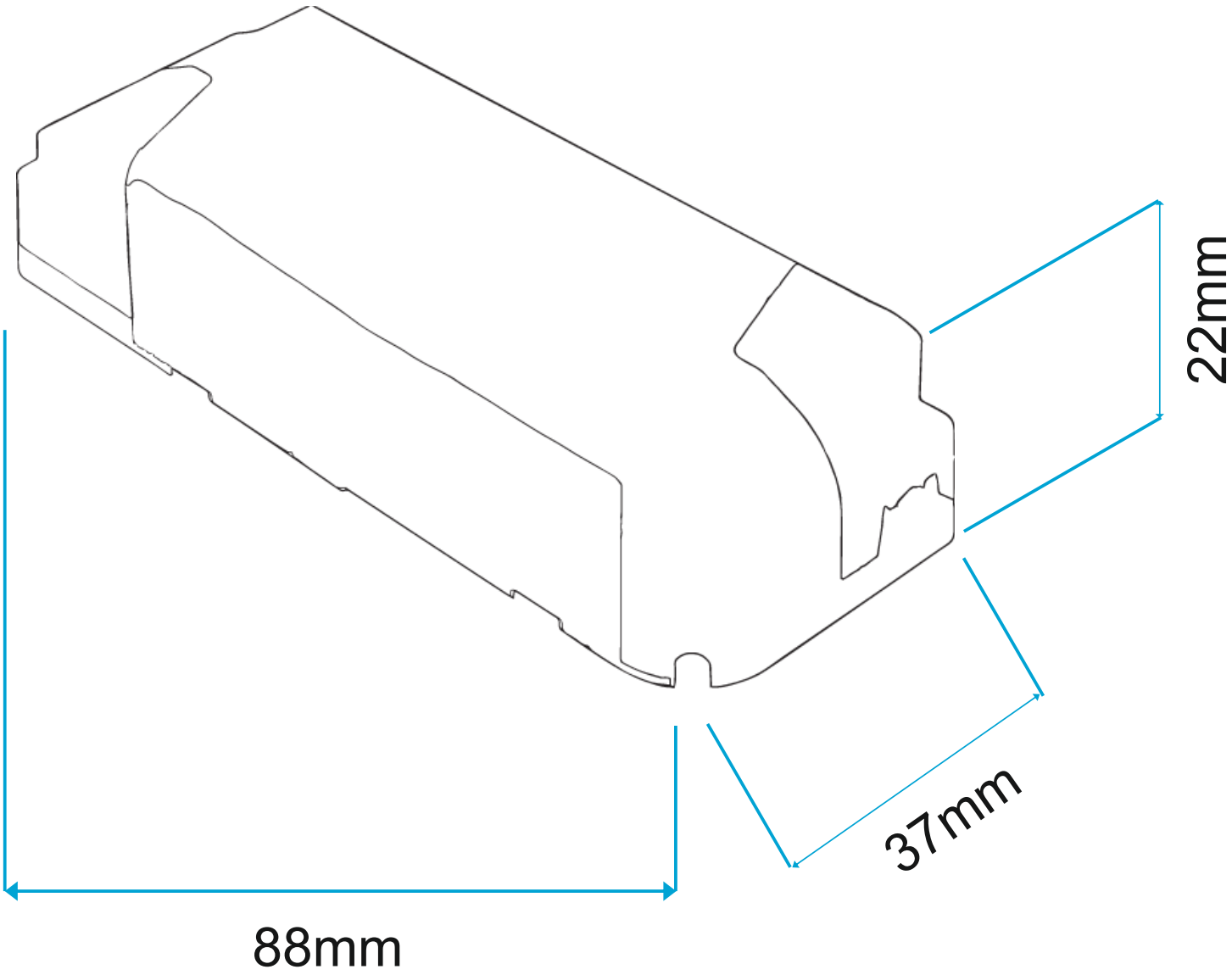
22mm
37mm
88mm